Features

- Low profile incremental encoder
- High-class rotational feel
- Haptic detent feedback
- RoHS compliant*

EC35D - 35 mm Low Profile Incremental Ring Encoder

Electrical Characteristics

Output..... 2-bit quadrature code

Contact Rating..... 1 mA @ 5 V DC

Insulation Resistance

..... 100 MΩ @ 250 V DC

Dielectric Withstanding Voltage

Sea Level..... 300 V AC

Electrical Travel ..... Continuous

Contact Bounce (15 RPM)..... 2 ms max.**

Environmental Characteristics

Operating Temperature..... -30 °C to +80 °C

Storage Temperature..... -40 °C to +85 °C

IP Rating..... IP 40

Soldering Condition

Wave Soldering ..... 260 °C for 5 s

Manual Soldering..... 300 °C for 3 s

Mechanical Characteristics

RPM (operating) .....60 max.

Mechanical Angle .....360 ° continuous

Detent Torque ..... 100 to 400 gf-cm

Rotational Life..... 3 0,000 cycles

Quadrature Output Table

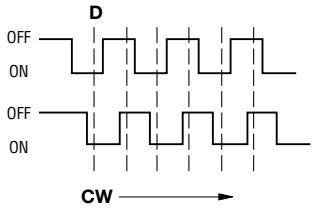

Suggested Filter Circuit

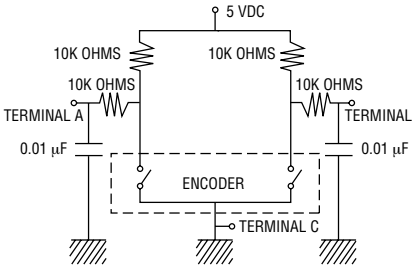

Product Dimensions

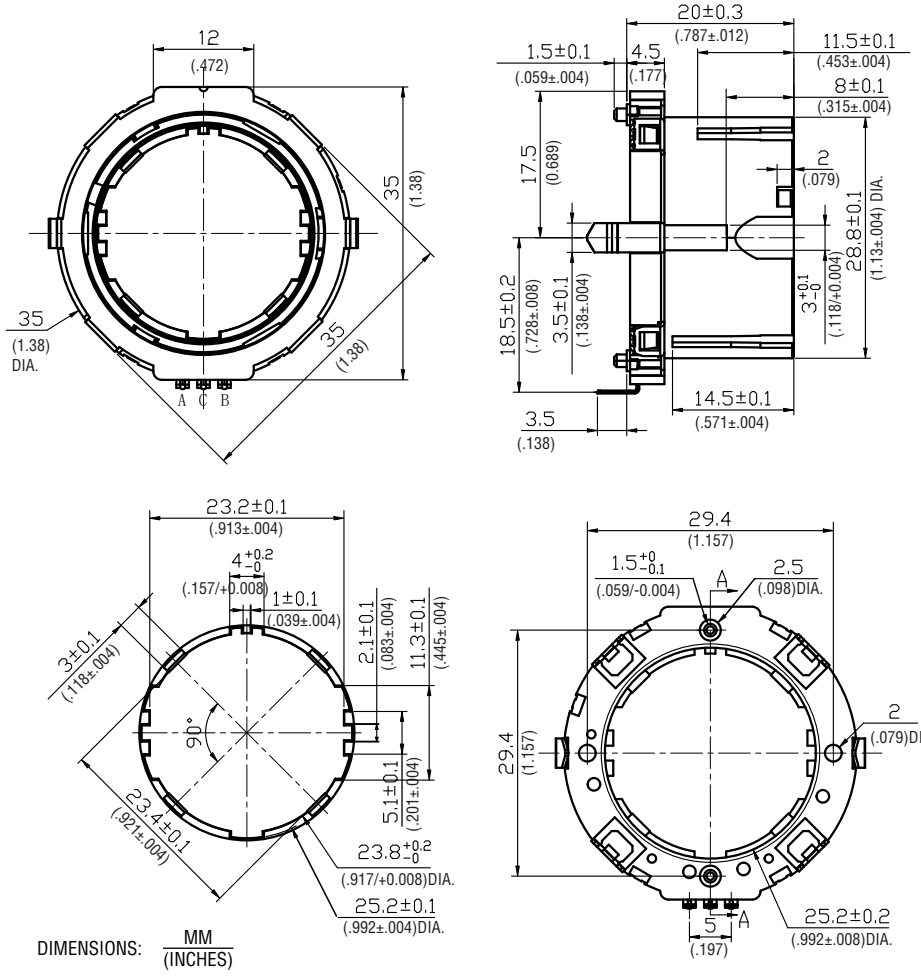

Recommended PCB Layout

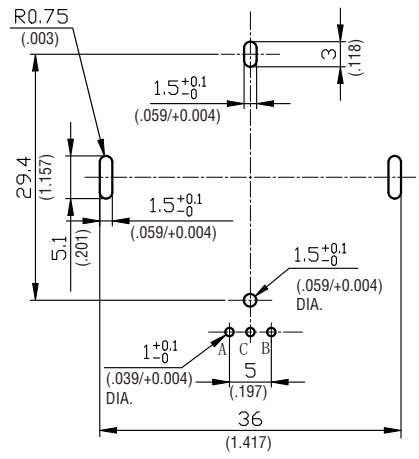

How To Order

EC35D00V01-0003 XA015P2H200

Model

Resolution

15P = 15 Pulses 30 Detents